MIAMI-DADE COUNTY
PRODUCT CONTROL SECTION
11805 SW 26 Street, Room 208
Miami, Florida 33175-2474
T (786) 315-2590 F (786) 315-2599
www.miamidade.gov/economy

DEPARTMENT OF REGULATORY AND ECONOMIC RESOURCES (RER)
BOARD AND CODE ADMINISTRATION DIVISION

NOTICE OF ACCEPTANCE (NOA)

Securitech Group, Inc., a subsidiary of ASSA ABLOY
225 Episcopal Rd.,
Berlin, CT 06037

SCOPE:

This NOA is being issued under the applicable rules and regulations governing the use of construction materials. The documentation submitted has been reviewed and accepted by Miami–Dade County RER–Product Control Section to be used in Miami–Dade County and other areas where allowed by the Authority Having Jurisdiction (AHJ).

This NOA shall not be valid after the expiration date stated below. The Miami–Dade County Product Control Section (In Miami–Dade County) and/ or the AHJ (in areas other than Miami–Dade County) reserve the right to have this product or material tested for quality assurance purposes. If this product or material fails to perform in the accepted manner, the manufacturer will incur the expense of such testing and the AHJ may immediately revoke, modify, or suspend the use of such product or material within their jurisdiction. RER reserves the right to revoke this acceptance if it is determined by Miami–Dade County Product Control Section that this product or material fails to meet the requirements of the applicable building code.

This product is approved as described herein and has been designed to comply with the Florida Building Code, including the High Velocity Hurricane Zone.

DESCRIPTION: Series "5000/7000/8000/ABM" Multi Locking Hardware for Double Outswing Doors -Component Approval – L.M.I. (Level E)

APPROVAL DOCUMENT: Drawing No. **113517-01,** titled "Miami-Dade County Component NOA for Double Outswing Doors - Securitech 5000/7000/8000/ABM Series", sheets 1 through 9 of 9, dated 11/15/24, with revision 4 dated 02/17/26, prepared by manufacturer, signed and sealed by Gordon D. Thomas, P.E., bearing the Miami-Dade County Product Control Approval stamp with the Notice of Acceptance number & approval date by the Miami-Dade County Product Control Section..

MISSILE IMPACT RATING: Large and Small Missile Impact Resistant

LABELING: Each unit shall bear a permanent label with the manufacturer's name or logo, city, state, model/series, and following statement: "Miami–Dade County Product Control Approved", unless otherwise noted herein.

RENEWAL of this NOA shall be considered after a renewal application has been filed and there has been no change in the applicable building code negatively affecting the performance of this product.

TERMINATION of this NOA will occur after the expiration date or if there has been a revision or change in the materials, use, and/ or manufacture of the product or process. Misuse of this NOA as an endorsement of any product, for sales, advertising or any other purposes shall automatically terminate this NOA. Failure to comply with any section of this NOA shall be cause for termination and removal of NOA.

ADVERTISEMENT: The NOA number preceded by the words Miami–Dade County, Florida, and followed by the expiration date may be displayed in advertising literature. If any portion of the NOA is displayed, then it shall be done in its entirety.

INSPECTION: A copy of this entire NOA shall be provided to the user by the manufacturer or its distributors and shall be available for inspection at the job site at the request of the Building Official.

This NOA consists of this page 1 and evidence pages E-1 and E-2, as well as approval document mentioned above.

The submitted documentation was reviewed by **Manuel Perez, P.E.**

MIAMI-DADE COUNTY APPROVED

3/17/26

NOA No. 25-0527.03
Expiration Date: March 26, 2031
Approval Date: March 26, 2026

Securitech Group, Inc., a subsidiary of ASSA ABLOY

NOTICE OF ACCEPTANCE: EVIDENCE SUBMITTED

A. DRAWINGS

1. Manufacturer's die drawings and sections.
(Submitted under NOA No. 25-0527.03)

2. Drawing No. **113517-01**, "Miami-Dade County Component NOA for Double Outswing Doors - Securitech 5000/7000/8000/ABM Series", sheets 1 through 9 of 9, dated 11/15/24, with revision 4 dated 02/17/26, prepared by manufacturer, signed and sealed by Gordon D. Thomas, P.E.

B. TESTS

1. Test reports on: 1) Air Infiltration Test, per FBC, TAS 202-94
2) Uniform Static Air Pressure Test, Loading per FBC, TAS 202-94
3) Water Resistance Test, per FBC, TAS 202-94
4) Large Missile Impact Test per FBC, TAS 201-94
5) Cyclic Wind Pressure Loading per FBC, TAS 203-94

along with marked-up drawings and installation diagram of Securitech multi-point hardware locking exit devices tested in Gensteel 4'4"x9'4" single inswing steel door (specimen D1) and 8'4"x9'4" double outswing doors (specimen A1, B1 and C1), issued to Gensteel Doors, prepared by QAI Laboratories, Test Report No. **22-1078aR3**, dated 01/06/25 and revised on 02/28/24, 04/28/25 and 06/12/25, signed and sealed by Idalmis Ortega, P.E.
(Note: This test report was authorized by Gensteel Doors to Securitech Group, Inc., to obtain Component approval)

C. CALCULATIONS

1. None.

D. QUALITY ASSURANCE

1. Miami-Dade Department of Regulatory and Economic Resources (RER)

E. MATERIAL CERTIFICATIONS

1. None.

Manuel Pérez, P.E.
Product Control Examiner
NOA No. 25-0527.03
Expiration Date: March 26, 2031
Approval Date: March 26, 2026

F. STATEMENTS

1. Statement letter of conformance, complying with **FBC 8th Edition (2023)** and no financial interest, dated February 22, 2026, issued by manufacturer, signed and sealed by Gordon D. Thomas, P.E.
2. Statement letter dated May 23, 2025, issued by Gensteel Doors, authorizing Securitech Group Inc., to use test reports No. **22-1078aR3** and **MED-0043aR4** to obtain Component NOA(s), signed by Hamidreza Alipour, Mechanical Engineer - Gensteel Doors, Inc.
3. Statement letter dated 12/05/25, issued by ASSA ABLOY group acquisition on October 03, 2023, of Securitech group, Inc. and manufacturing plant, assets, equipment, relocated in Berlin, Connecticut. The acquisition includes all intellectual property, product approval, listing, patents, trademarks and related rights of Securitech Group Inc., signed by Adam Dowden, Director Securitech and Doug Thompson, President ASSA ABLOY, Access & Egress Hardware Group.
4. Press release dated October 04, 2023, by ASSA ABLOY Acquiring Securitech Group Inc.
5. Proposal No. **19-0868R-1** issued by the Product Control Section, dated November 09, 2022, signed by Ishaq Chanda, P.E.

G. OTHERS

1. None.

Manuel Pérez, P.E.
Product Control Examiner
NOA No. 25-0527.03
Expiration Date: March 26, 2031
Approval Date: March 26, 2026

REV.	DATE	DESCRIPTION	BY
1	8/10/25	EXIT DEVICE NOA PER MIAMI–DADE RER	YF
2	12/4/25	DBL DR NOA PER MIAMI–DADE RER	YF
3	1/16/26	REVISED PER MIAMI–DADE RER COMMENTS	YF
4	2/17/26	REVISED DRAWING NUMBER PER M–D RER	YF

COMPONENT LOCKING DEVICE DOOR OPENING SIZE LIMITATIONS

(APPROVED DOOR SYSTEM UNDER SEPARATE APPROVAL)

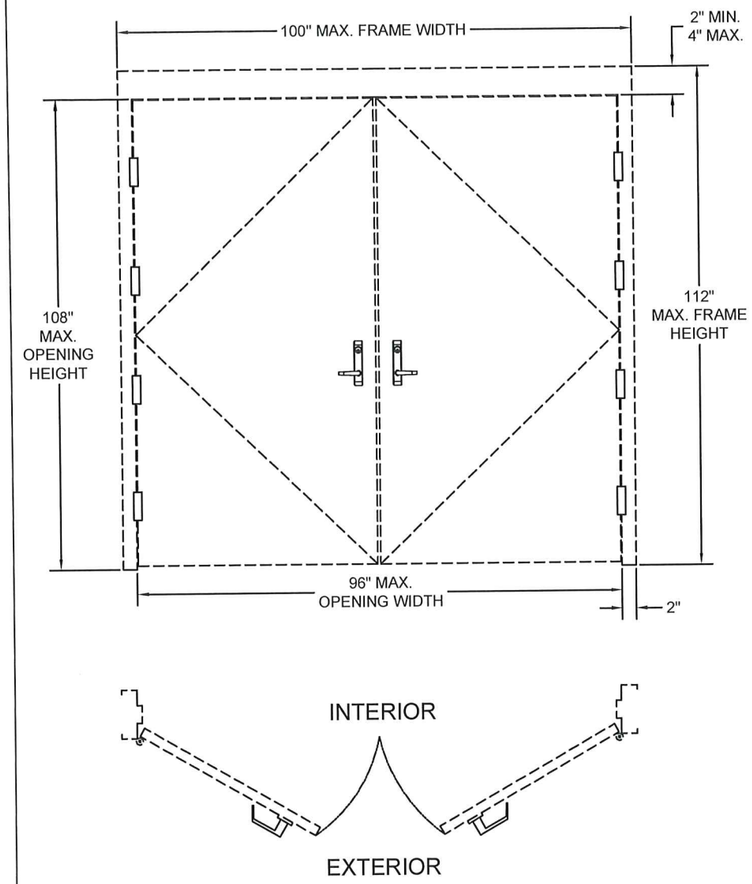

COMPONENT LOCKING DEVICES APPLICATIONS

DOUBLE OUTSWING DOORS WITH EXIT DEVICE (SEE TABLE 1.1)

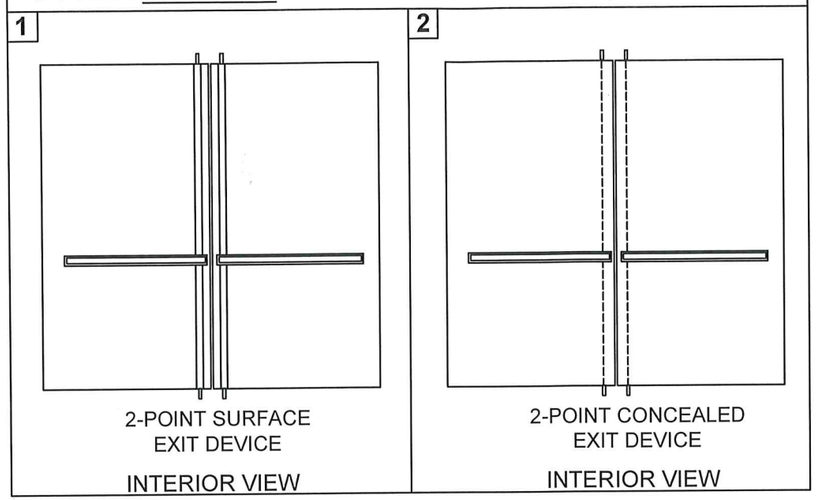

DOUBLE OUTSWING DOORS WITH LOCKSET (SEE TABLE 1.1)

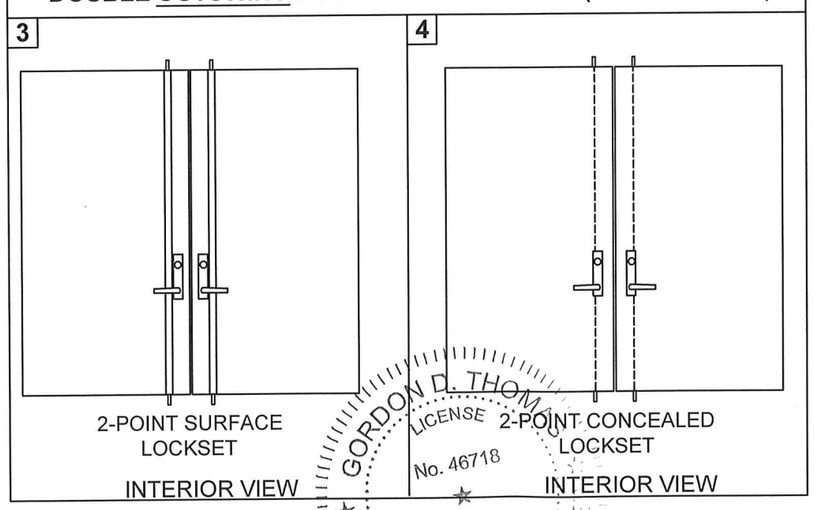

GENERAL NOTES:

1. EXIT DEVICES AND LOCKSETS (COMPONENT APPROVAL) LISTED IN THIS DOCUMENT, HAVE BEEN TESTED TO HVHZ PROTOCOLS TAS-201, TAS-202 AND TAS-203, AND COMPLY WITH 8th EDITION OF FBC (2023) WITH RISK CATEGORY IV IMPACT.

2. THIS COMPONENT APPROVAL IS APPLICABLE TO RISK CATEGORY IV ONLY WHEN USED WITH RISK CATEGORY IV APPROVED DOOR SYSTEMS, TESTED TO LARGE MISSILE IMPACT LEVEL "E".

3. THIS COMPONENT APPROVAL CAN BE USED OUTSIDE OF RISK CATEGORY IV WHEN USED WITH APPROVED DOOR SYSTEM, TESTED TO LARGE MISSILE IMPACT LEVEL "D".

4. ESTABLISHED PERFORMANCE RATINGS ARE:

POSITIVE DESIGN PRESSURE	+150 PSF
NEGATIVE DESIGN PRESSURE	-150 PSF
LARGE MISSILE IMPACT	TESTED LEVEL "E", CAN QUALIFY LEVEL "D" (NOTES 2 & 3) .

TABLE 1.1

ASSY	DESCRIPTION	HARDWARE SERIES	REF. SHT No.
1	PAIR OF OUTSWING DOORS WITH 2-POINT SURFACE VERTICAL ROD EXIT DEVICES	8VT-SBD	2
2	PAIR OF OUTSWING DOORS WITH 2-POINT CONCEALED VERTICAL ROD EXIT DEVICES	8VT-IHD	3
		AWVCJ-TXX	3
		7VT-IHD	4
3	PAIR OF OUTSWING DOORS WITH 2-POINT SURFACE VERTICAL ROD LOCKSETS	8VL-SBD	5
4	PAIR OF OUTSWING DOORS WITH 2-POINT CONCEALED VERTICAL ROD LOCKSETS	8VL-IHD	6
		52V-IHD	7
		7VL-IHD	7
		AWVCJ-EXX	8
	EXTERIOR LEVER TRIMS	ALL OF THE ABOVE	9

LIMITATIONS:

1. INSTALLATION OF THIS MULTI-POINT LOCKING SYSTEM REQUIRES 16 GA. MINIMUM STEEL DOOR AND 16 GA. MINIMUM STEEL FRAME, HOLDING CURRENT LEVEL "E" RATED NOA. LOWER DESIGN PRESSURE RATING OF THE DOOR OR THIS COMPONENT SHALL CONTROL (FOR LEVEL "D" RATED, SEE NOTE 3 ON THIS SHEET) .
2. LEVEL "E" RATED DOOR PANEL TO HAVE 14 GA. CONTINUOUS VERTICAL 5" WIDE MIN. REINFORCEMENT CHANNEL IN LOCK SIDE, BUTTED BETWEEN 16 GA. MIN TOP AND BOTTOM END CHANNELS.
3. ELECTRICAL AND ELECTRONIC FUNCTIONS ARE NOT PART OF THIS APPROVAL AND SUCH INSTALLATIONS MUST BE REVIEWED BY CORRESPONDING BUILDING AUTHORITY.
4. APPROVED LEVEL "E" RATED STEEL DOOR PANELS CAN NOT BE WIDER THAN 48" AND HIGHER THAN 108".
5. SEE TABLE 1.1 ON THIS SHEET FOR HARDWARE SERIES, DESCRIPTION AND DRAWING REFERENCE.

GORDON D. THOMAS LICENSE No. 46718 STATE OF FLORIDA PROFESSIONAL ENGINEER

2/22/26

Gordon Thomas, P.E.
3759 Blossom Court
Mason, OH 45040
Florida # 46718

Date

PRODUCT APPROVED
As complying with the Florida Building Code
NOA-No. 25-0527.03
Approval Date: 03/26/2026
By: Manuel Perez
Miami-Dade Product Control

SECURITECH
ASSA ABLOY
225 Episcopal Rd.
Berlin, CT 06037
(718)392-9000
Securitech, subsidiary of ASSA ABLOY

MIAMI–DADE COUNTY COMPONENTS NOA
FOR DOUBLE OUTSWING DOOR ELEVATIONS
SECURITECH LOCKSETS & EXIT DEVICES
5000/7000/8000/ABM SERIES

DATE CREATED 11–15–2024	DRAWN BY HL	DESIGNED BY HL	
DOCUMENT ID 113517–XX–XXX		SCALE N/A	SIZE B
DRAWING NUMBER (ALT ID) 113517–01 SHEET 1 OF 9			REV 04

REV.	DATE	DESCRIPTION	BY
1	8/10/25	EXIT DEVICE NOA PER MIAMI–DADE RER	YF
2	12/4/25	DBL OUTSWING DR NOA PER MD RER	YF
3	1/16/26	REVISED PER MD RER COMMENTS	YF
4	2/17/26	REVISED DRAWING NUMBER PER M–D RER	YF

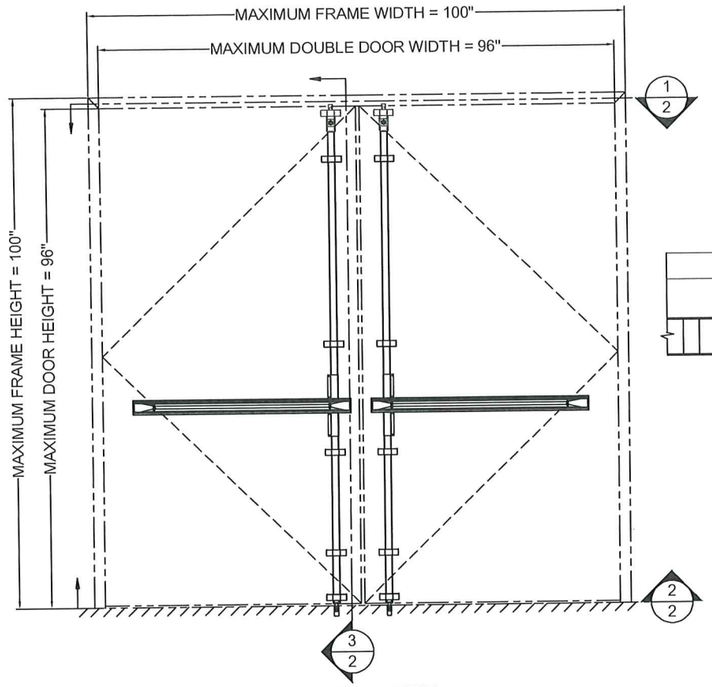

INTERIOR VIEW

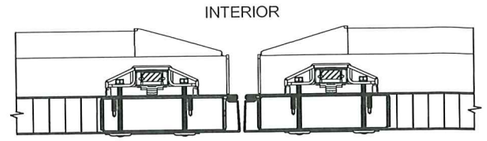

1/2 HORIZONTAL CROSS SECTION DOUBLE DOOR AUTOBOLT 8VT-SBD-TT SERIES EXIT DEVICE MEETING EDGES OF DOORS

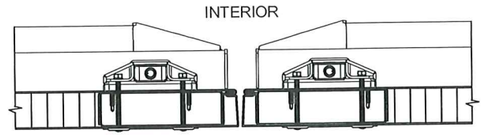

2/2 HORIZONTAL CROSS SECTION DOUBLE DOOR AUTOBOLT 8VT-SBD-TT SERIES EXIT DEVICE MEETING EDGES OF DOORS

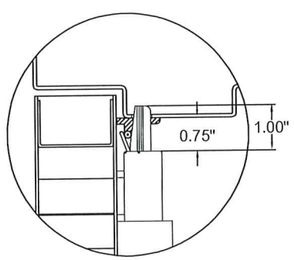

DETAIL "A"

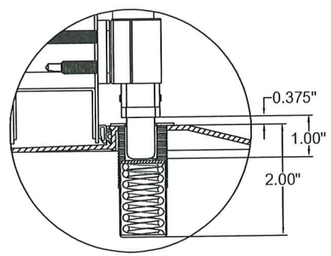

DETAIL "B"

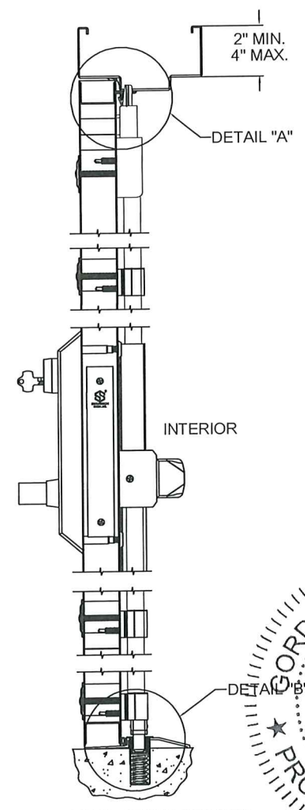

3/2 VERTICAL CROSS SECTION DOUBLE & SINGLE DOOR HDWE AUTOBOLT 8VT-SBD SERIES EXIT DEVICE

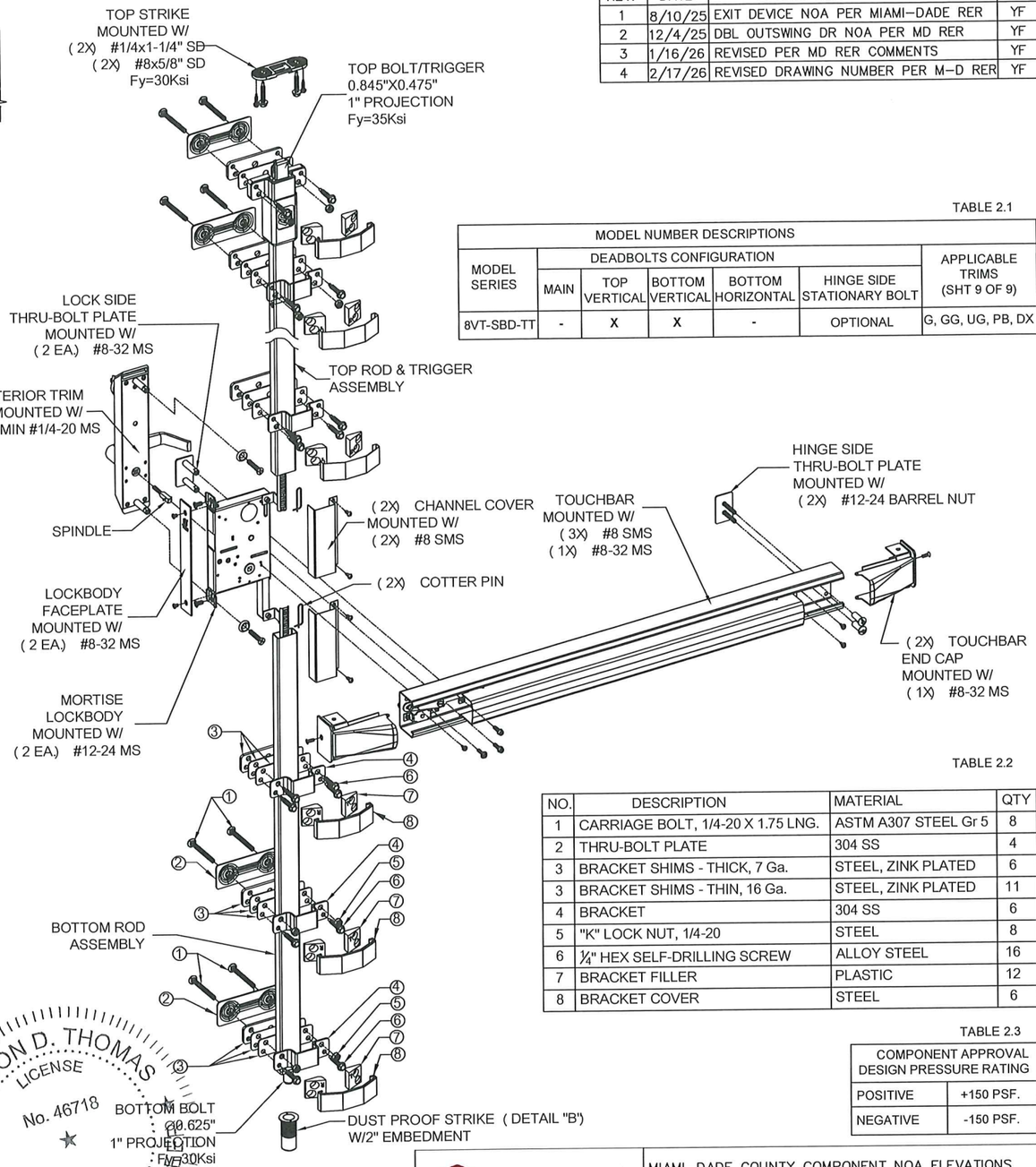

TABLE 2.1

MODEL NUMBER DESCRIPTIONS						
MODEL SERIES	DEADBOLTS CONFIGURATION					APPLICABLE TRIMS (SHT 9 OF 9)
	MAIN	TOP VERTICAL	BOTTOM VERTICAL	BOTTOM HORIZONTAL	HINGE SIDE STATIONARY BOLT	
8VT-SBD-TT	-	X	X	-	OPTIONAL	G, GG, UG, PB, DX

TABLE 2.2

NO.	DESCRIPTION	MATERIAL	QTY
1	CARRIAGE BOLT, 1/4-20 X 1.75 LNG.	ASTM A307 STEEL Gr 5	8
2	THRU-BOLT PLATE	304 SS	4
3	BRACKET SHIMS - THICK, 7 Ga.	STEEL, ZINK PLATED	6
3	BRACKET SHIMS - THIN, 16 Ga.	STEEL, ZINK PLATED	11
4	BRACKET	304 SS	6
5	"K" LOCK NUT, 1/4-20	STEEL	8
6	¼" HEX SELF-DRILLING SCREW	ALLOY STEEL	16
7	BRACKET FILLER	PLASTIC	12
8	BRACKET COVER	STEEL	6

TABLE 2.3

COMPONENT APPROVAL DESIGN PRESSURE RATING	
POSITIVE	+150 PSF.
NEGATIVE	-150 PSF.

NOTES:

1. ALL FINISHES AND FUNCTIONS ARE OFFERED.
2. SEE SHEET 9 OF 9 FOR AVAILABLE LEVER TRIM OPTIONS.
3. ELECTRICAL AND ELECTRONIC FUNCTIONS INSTALLATIONS ARE UNDER SEPARATE APPROVAL AND MUST BE REVIEWED BY CORRESPONDING AUTHORITY.
4. THIS DEVICE IS APPROVED TO BE EQUAL ALTERNATIVE TO BE USED IN 16 GA STEEL COMMERCIAL DOORS HOLDING CURRENT IMPACT "E" RATED NOA, THE LOWEST DESIGN PRESSURE AND IMPACT PROTECTION LEVEL RATINGS SHALL APPLY. SEE SHEET 1 OF 9 FOR RATINGS AND LIMITATIONS.
5. THE DEVICE SHALL BE INSTALLED IN COMMERCIAL IMPACT "E" RATED STEEL DOOR NO WIDER THAN 48" AND HIGHER THAN 108". FOR IMPACT "D" SEE SHEET 1 OF 9.
6. OPTIONAL SIGNAL SWITCHES AND POWER TRANSFER UNITS MAY BE USED AS ALLOWED BY CODE AND IF IT DOESN'T AFFECT MECHANICAL PROPERTIES OF THIS DEVICE AND/OR INHIBIT EGRESS, TO BE REVIEWED BY AHJ.
7. THIS DEVICE CAN BE INSTALLED AS PART OF "E" & "D" IMPACT RESISTANT UNIT.
8. TWO-POINT SURFACE VERTICAL ROD MODELS - 8VT-SBD-TT - SEE TABLE 2.1 ON THIS SHEET.

GORDON D. THOMAS LICENSE No. 46718 STATE OF FLORIDA PROFESSIONAL ENGINEER

2/22/26

Gordon Thomas, P.E.
3759 Blossom Court
Mason, OH 45040
Florida # 46718

Date

PRODUCT APPROVED
As complying with the Florida Building Code
NOA-No. 25-0527.03
Approval Date: 03/26/2026
By: Manuel Perez
Miami-Dade Product Control

SECURITECH
ASSA ABLOY
225 Episcopal Rd.
Berlin, CT 06037
1-800-622-5625
Securitech, subsidiary of ASSA ABLOY

MIAMI–DADE COUNTY COMPONENT NOA ELEVATIONS
SECURITECH MULTI–POINT SURFACE
TWO–POINT VERTICAL EXIT DEVICES 8VT–SBD–TT SERIES

DATE CREATED	DRAWN BY	DESIGNED BY
11–15–24	HL	HL

DOCUMENT ID	SCALE	SIZE
113517–XX–XXX	N/A	B

DRAWING NUMBER (ALT ID)	REV
113517–01 SHEET 2 OF 9	04

REV.	DATE	DESCRIPTION	BY
1	8/10/25	EXIT DEVICE NOA PER MIAMI–DADE RER	YF
2	12/4/25	DBL OUTSWING DR NOA PER MD RER	YF
3	1/16/26	REVISED PER MD RER COMMENTS	YF
4	2/17/26	REVISED DRAWING NUMBER PER M–D RER	YF

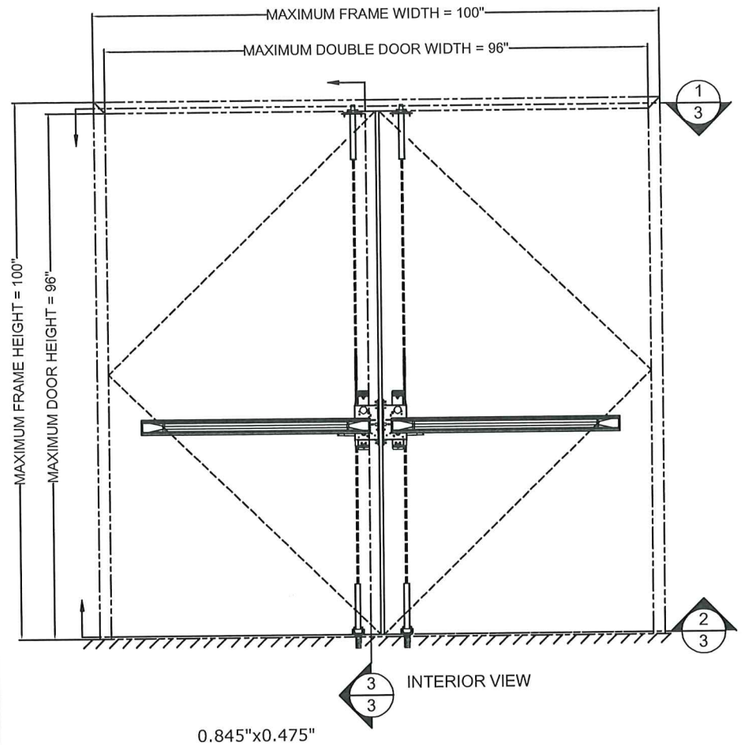

INTERIOR VIEW

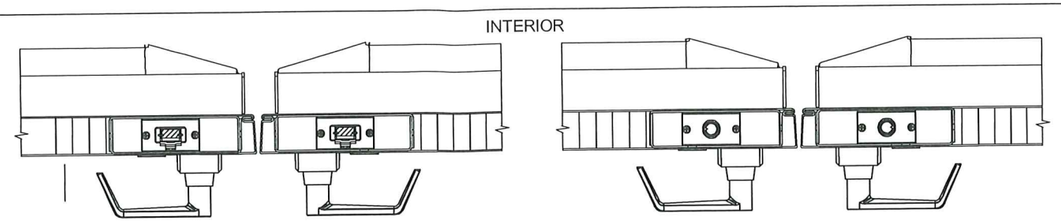

1/3 HORIZONTAL CROSS SECTIONS DOUBLE DOOR HDWE AUTOBOLT 8VT-IHD-TI & AWVCJ-TXX SERIES EXIT DEVICE 2/3

MEETING EDGES OF DOORS

TABLE 3.1

MODEL NUMBER DESCRIPTIONS						
MODEL SERIES	DEADBOLTS CONFIGURATION					APPLICABLE TRIMS (SHT 9 OF 9)
	MAIN	TOP VERTICAL	BOTTOM VERTICAL	BOTTOM HORIZONTAL	HINGE SIDE STATIONARY BOLT	
8VT-IHD-TI	-	X	X	-	OPTIONAL	G, GG, UG, PB, DX
AWVCJ-TXX	-	X	X	-	OPTIONAL	G, GG, UG, PB, DX

TABLE 3.2

COMPONENT APPROVAL DESIGN PRESSURE RATING	
POSITIVE	+150 PSF.
NEGATIVE	-150 PSF.

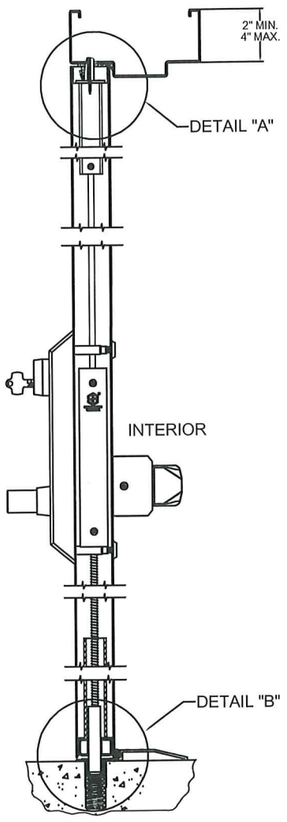

VERTICAL CROSS SECTION DOUBLE DOOR HDWE 3/3 AUTOBOLT 8VT-IHD-TI & AWVCJ-TXX SERIES EXIT DEVICE

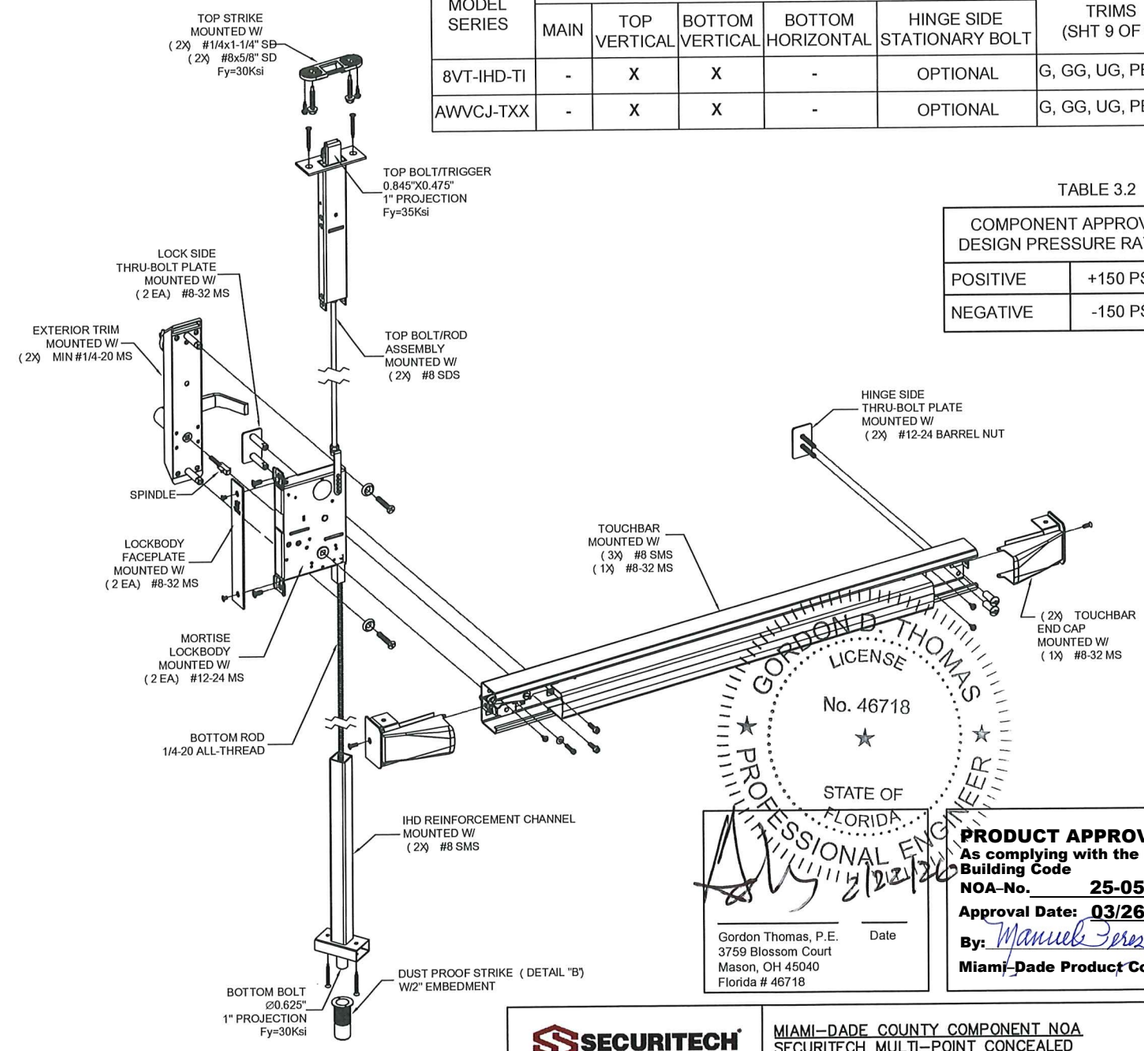

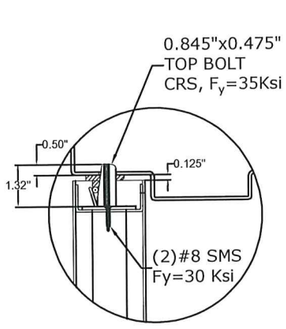

DETAIL "A"

TOP BOLT REINFORCEMENT CHANNEL TRIGGER ASSEMBLY

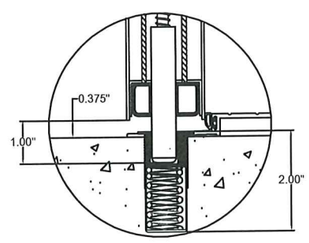

DETAIL "B"

BOTTOM BOLT REINFORCEMENT CHANNEL ASSEMBLY

NOTES:

1. ALL FINISHES AND FUNCTIONS ARE OFFERED.
2. SEE SHEET 9 OF 9 FOR AVAILABLE LEVER TRIM OPTIONS.
3. ELECTRICAL AND ELECTRONIC FUNCTIONS INSTALLATIONS ARE UNDER SEPARATE APPROVAL AND MUST BE REVIEWED BY CORRESPONDING AUTHORITY.
4. THIS DEVICE IS APPROVED TO BE EQUAL ALTERNATIVE TO BE USED IN 16 GA STEEL COMMERCIAL DOORS HOLDING CURRENT IMPACT "E" RATED NOA, THE LOWEST DESIGN PRESSURE AND IMPACT PROTECTION LEVEL RATINGS SHALL APPLY. SEE SHEET 1 OF 9 FOR RATINGS AND LIMITATIONS.
5. THE DEVICE SHALL BE INSTALLED IN COMMERCIAL IMPACT "E" RATED STEEL DOOR NO WIDER THAN 48" AND HIGHER THAN 108". FOR IMPACT "D" SEE SHEET 1 OF 9.
6. OPTIONAL SIGNAL SWITCHES AND POWER TRANSFER UNITS MAY BE USED AS ALLOWED BY CODE AND IF IT DOESN'T AFFECT MECHANICAL PROPERTIES OF THIS DEVICE AND/OR INHIBIT EGRESS, TO BE REVIEWED BY AHJ.
7. THIS DEVICE CAN BE INSTALLED AS PART OF "E" & "D" IMPACT RESISTANT UNIT.
8. TWO-POINT CONCEALED VERTICAL ROD MODELS - 8VT-IHD-TI & AWVCJ-TXX - SEE TABLE 3.1 ON THIS SHEET.

GORDON D. THOMAS
LICENSE
No. 46718
STATE OF FLORIDA
PROFESSIONAL ENGINEER

2/23/26

Gordon Thomas, P.E.
3759 Blossom Court
Mason, OH 45040
Florida # 46718

Date

PRODUCT APPROVED
As complying with the Florida Building Code
NOA-No. 25-0527.03
Approval Date: 03/26/2026
By: Manuel Perez
Miami-Dade Product Control

SECURITECH
ASSA ABLOY
225 Episcopal Rd.
Berlin, CT 06037
(718)392–9000
Securitech, subsidiary of ASSA ABLOY

MIAMI–DADE COUNTY COMPONENT NOA
SECURITECH MULTI–POINT CONCEALED
TWO–POINT VERTICAL EXIT DEVICES
8VT–IHD–TI AND AWVCJ–TXX SERIES

DATE CREATED	DRAWN BY	DESIGNED BY	
11–15–24	HL	HL	
DOCUMENT ID 113517–XX–XXX		SCALE N/A	SIZE B
DRAWING NUMBER (ALT ID) 113517–01 SHEET 3 OF 9			REV 04

REV.	DATE	DESCRIPTION	BY
1	8/10/25	EXIT DEVICE NOA PER MIAMI–DADE RER	YF
2	12/4/25	DBL OUTSWING DR NOA PER MD RER	YF
3	1/16/26	REVISED PER MD RER COMMENTS	YF
4	2/17/26	REVISED DRAWING NUMBER PER M–D RER	YF

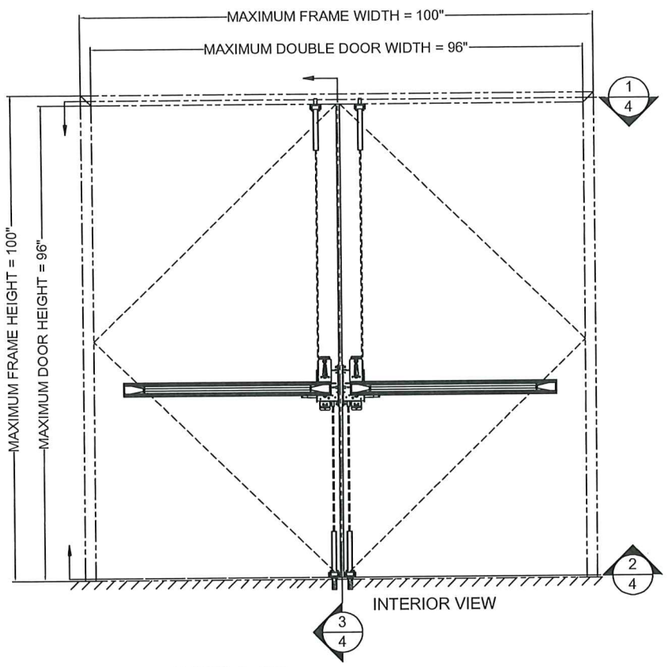

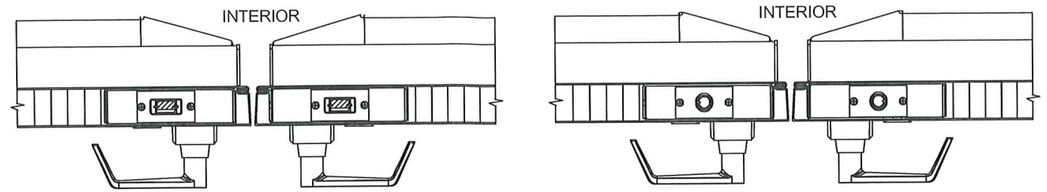

HORIZONTAL CROSS SECTIONS DOUBLE DOOR HDWE
AUTOBOLT 7VT-IHD SERIES EXIT DEVICE
(1/4) MEETING EDGES OF DOORS (2/4)

TABLE 4.1

MODEL NUMBER DESCRIPTIONS						
MODEL SERIES	DEADBOLTS CONFIGURATION					APPLICABLE TRIMS (SHT 9 OF 9)
	MAIN	TOP VERTICAL	BOTTOM VERTICAL	BOTTOM HORIZONTAL	HINGE SIDE STATIONARY BOLT	
7VT-IHD		X	X	-	OPTIONAL	G, GG, E, S

TABLE 4.2

COMPONENT APPROVAL DESIGN PRESSURE RATING	
POSITIVE	+150 PSF.
NEGATIVE	-150 PSF.

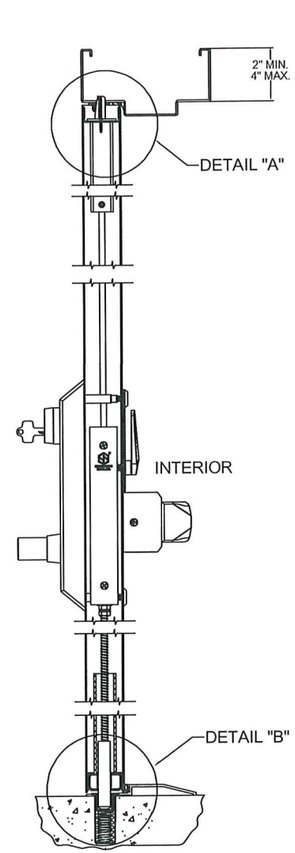

VERTICAL CROSS SECTION
(3/4) DOUBLE DOOR HDWE
AUTOBOLT 7VT-IHD SERIES EXIT DEVICE

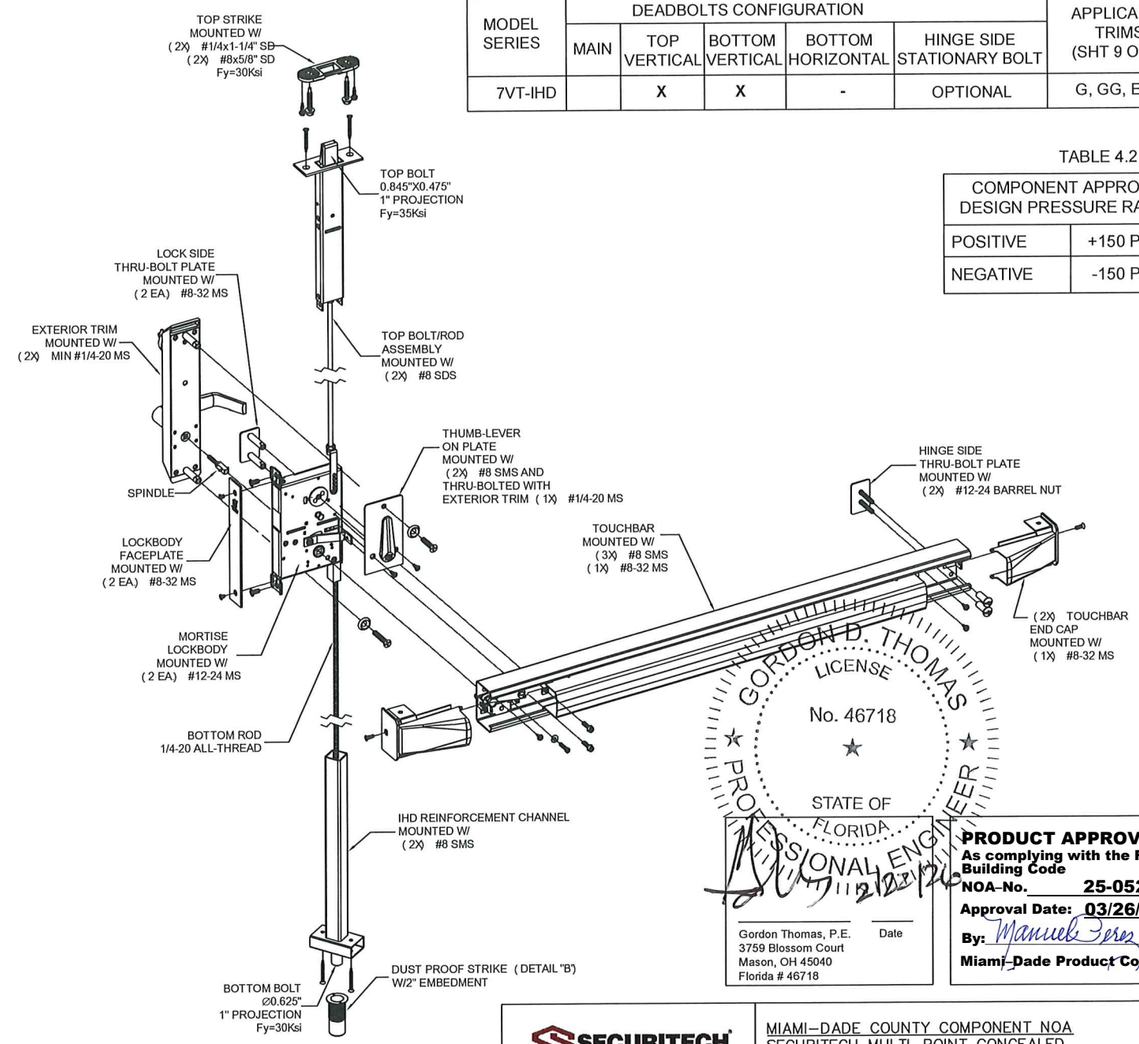

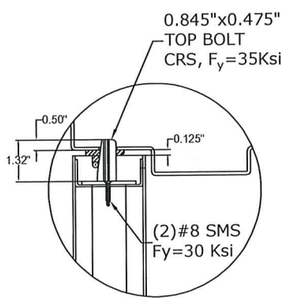

DETAIL "A"
TOP BOLT REINFORCEMENT
CHANNEL TRIGGER ASSEMBLY

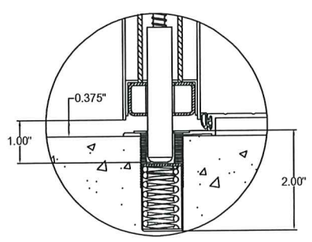

DETAIL "B"
BOTTOM BOLT
REINFORCEMENT CHANNEL ASSEMBLY

NOTES:

1. ALL FINISHES AND FUNCTIONS ARE OFFERED.
2. SEE SHEET 9 OF 9 FOR AVAILABLE LEVER TRIM OPTIONS.
3. ELECTRICAL AND ELECTRONIC FUNCTIONS INSTALLATIONS ARE UNDER SEPARATE APPROVAL AND MUST BE REVIEWED BY CORRESPONDING AUTHORITY.
4. THIS DEVICE IS APPROVED TO BE EQUAL ALTERNATIVE TO BE USED IN 16 GA STEEL COMMERCIAL DOORS HOLDING CURRENT IMPACT "E" RATED NOA, THE LOWEST DESIGN PRESSURE AND IMPACT PROTECTION LEVEL RATINGS SHALL APPLY. SEE SHEET 1 OF 9 FOR RATINGS AND LIMITATIONS.
5. THE DEVICE SHALL BE INSTALLED IN COMMERCIAL IMPACT "E" RATED STEEL DOOR NO WIDER THAN 48" AND HIGHER THAN 108". FOR IMPACT "D" SEE SHEET 1 OF 9.
6. OPTIONAL SIGNAL SWITCHES AND POWER TRANSFER UNITS MAY BE USED AS ALLOWED BY CODE AND IF IT DOESN'T AFFECT MECHANICAL PROPERTIES OF THIS DEVICE AND/OR INHIBIT EGRESS, TO BE REVIEWED BY AHJ.
7. THIS DEVICE CAN BE INSTALLED AS PART OF "E" & "D" IMPACT RESISTANT UNIT.
8. TWO-POINT CONCEALED VERTICAL ROD MODELS - 7VT-IHD - SEE TABLE 4.1 ON THIS SHEET.

GORDON D. THOMAS
LICENSE
No. 46718
STATE OF FLORIDA
PROFESSIONAL ENGINEER

Gordon Thomas, P.E.
3759 Blossom Court
Mason, OH 45040
Florida # 46718
Date

PRODUCT APPROVED
As complying with the Florida Building Code
NOA-No. 25-0527.03
Approval Date: 03/26/2026
By: Manuel Perez
Miami-Dade Product Control

SECURITECH
ASSA ABLOY
225 Episcopal Rd.
Berlin, CT 06037
(718)392–9000
Securitech, subsidiary of ASSA ABLOY

MIAMI–DADE COUNTY COMPONENT NOA
SECURITECH MULTI–POINT CONCEALED
TWO–POINT VERTICAL EXIT DEVICES 7VT–IHD SERIES

DATE CREATED	DRAWN BY	DESIGNED BY	
11–15–24	HL	HL	
DOCUMENT ID 113517–XX–XXX		SCALE N/A	SIZE B
DRAWING NUMBER (ALT ID) 113517–01 SHEET 4 OF 9			REV 04

DATE	REV.	DESCRIPTION	BY
8/10/25	1	EXIT DEVICE NOA PER MIAMI–DADE RER	YF
12/4/25	2	DBL OUTSWING DR NOA PER MD RER	YF
2/17/26	3	REVISED DRAWING NUMBER PER M–D RER	YF

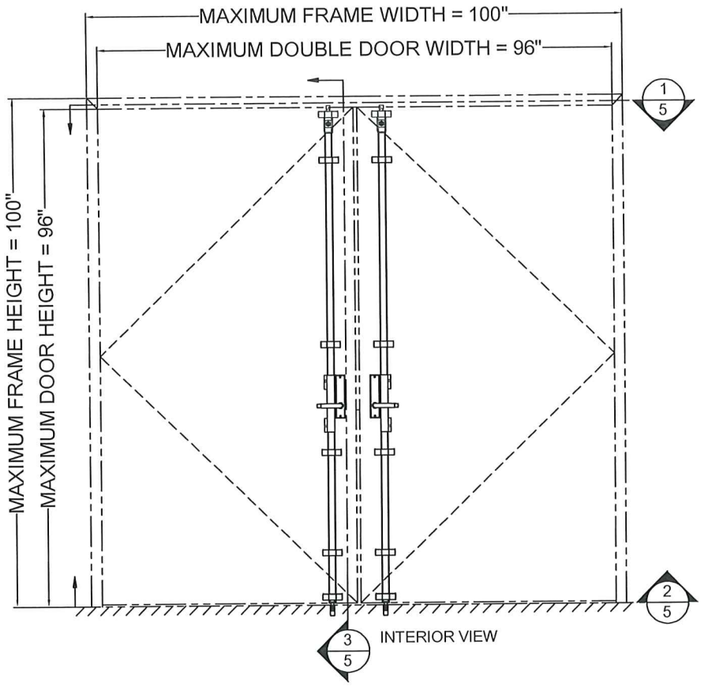

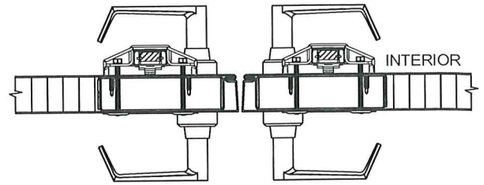

1/5 HORIZONTAL CROSS SECTION DOUBLE DOOR
AUTOBOLT 8VL-SBD-TT SERIES LOCKSET
TOP BOLTS / MEETING EDGES OF DOORS

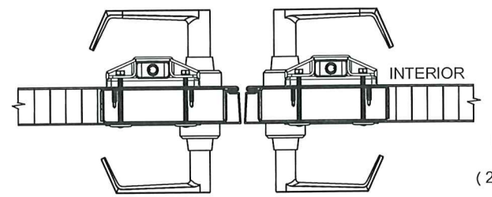

2/5 HORIZONTAL CROSS SECTION DOUBLE DOOR
AUTOBOLT 8VL-SBD-TT SERIES LOCKSET
BOTTOM BOLTS / MEETING EDGES OF DOORS

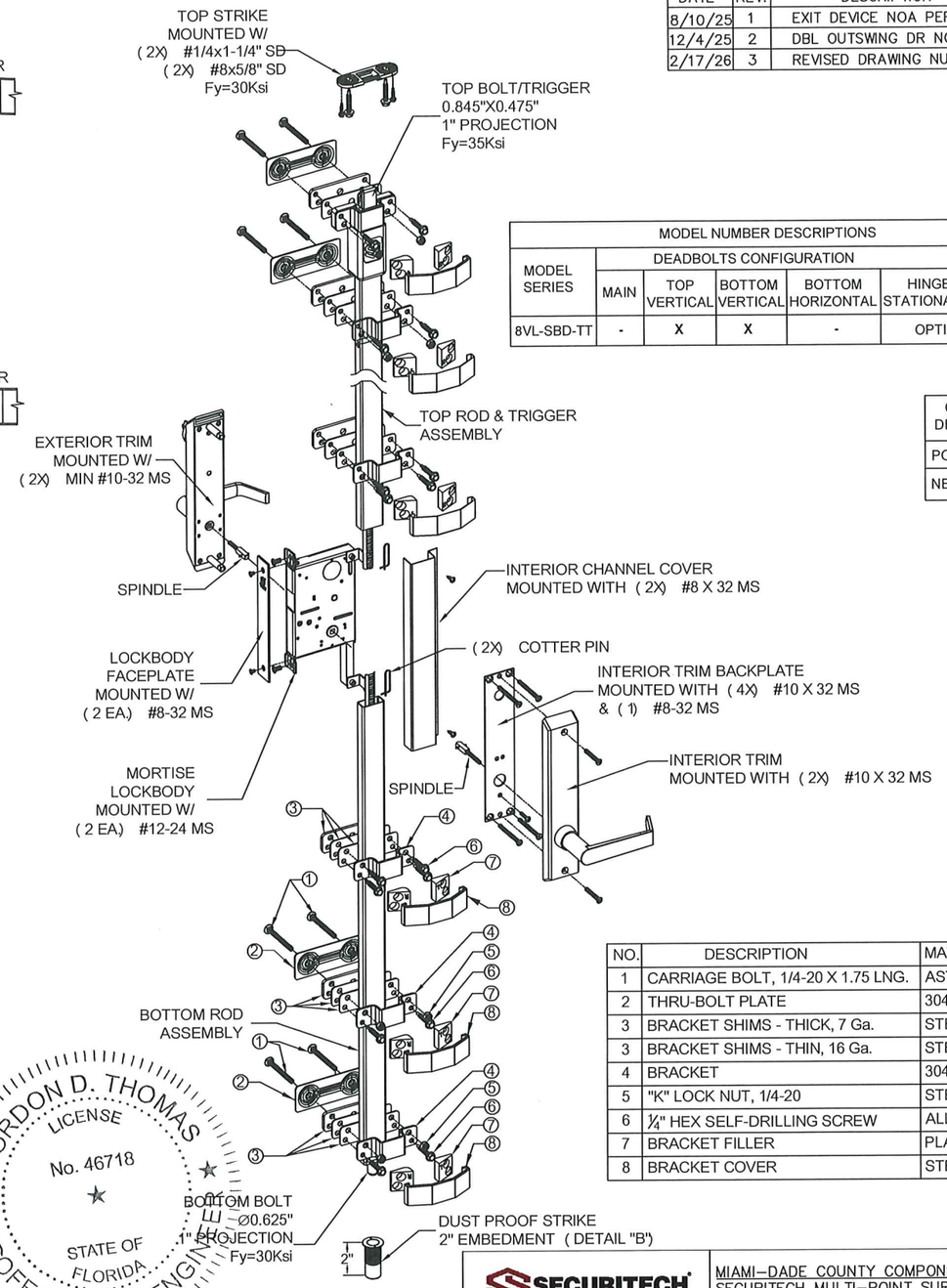

TABLE 5.1

MODEL NUMBER DESCRIPTIONS						
MODEL SERIES	DEADBOLTS CONFIGURATION					APPLICABLE TRIMS (SHT 9 OF 9)
	MAIN	TOP VERTICAL	BOTTOM VERTICAL	BOTTOM HORIZONTAL	HINGE SIDE STATIONARY BOLT	
8VL-SBD-TT	-	X	X	-	OPTIONAL	G, GG, UG, PB, DX

TABLE 5.2

COMPONENT APPROVAL DESIGN PRESSURE RATING	
POSITIVE	+150 PSF.
NEGATIVE	-150 PSF.

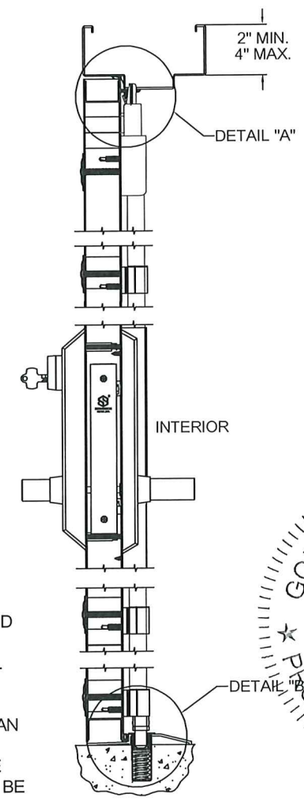

3/5 VERTICAL CROSS SECTION
DOUBLE DOOR HDWE
AUTOBOLT 8VL-SBD-TT SERIES LOCK

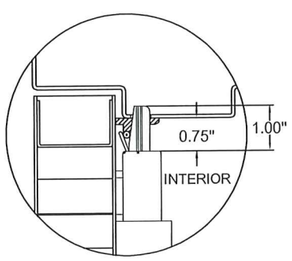

DETAIL "A"

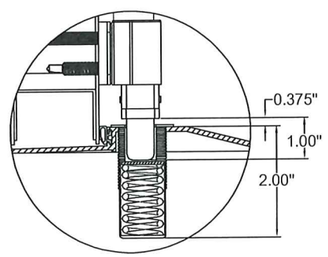

DETAIL "B"

TABLE 5.3

NO.	DESCRIPTION	MATERIAL	QTY
1	CARRIAGE BOLT, 1/4-20 X 1.75 LNG.	ASTM A307 STEEL Gr 5	8
2	THRU-BOLT PLATE	304 SS	4
3	BRACKET SHIMS - THICK, 7 Ga.	STEEL, ZINK PLATED	6
3	BRACKET SHIMS - THIN, 16 Ga.	STEEL, ZINK PLATED	11
4	BRACKET	304 SS	6
5	"K" LOCK NUT, 1/4-20	STEEL	8
6	¼" HEX SELF-DRILLING SCREW	ALLOY STEEL	16
7	BRACKET FILLER	PLASTIC	12
8	BRACKET COVER	STEEL	6

NOTES:

1. ALL FINISHES AND FUNCTIONS ARE OFFERED.
2. SEE SHEET 9 OF 9 FOR AVAILABLE LEVER TRIM OPTIONS.
3. ELECTRICAL AND ELECTRONIC FUNCTIONS INSTALLATIONS ARE UNDER SEPARATE APPROVAL AND MUST BE REVIEWED BY CORRESPONDING AUTHORITY.
4. THIS DEVICE IS APPROVED TO BE EQUAL ALTERNATIVE TO BE USED IN 16 GA STEEL COMMERCIAL DOORS HOLDING CURRENT IMPACT "E" RATED NOA, THE LOWEST DESIGN PRESSURE AND IMPACT PROTECTION LEVEL RATINGS SHALL APPLY. SEE SHEET 1 OF 9 FOR RATINGS AND LIMITATIONS.
5. THE DEVICE SHALL BE INSTALLED IN COMMERCIAL IMPACT "E" RATED STEEL DOOR NO WIDER THAN 48" AND HIGHER THAN 108". FOR IMPACT "D" SEE SHEET 1 OF 9.
6. OPTIONAL SIGNAL SWITCHES AND POWER TRANSFER UNITS MAY BE USED AS ALLOWED BY CODE AND IF IT DOESN'T AFFECT MECHANICAL PROPERTIES OF THIS DEVICE AND/OR INHIBIT EGRESS, TO BE REVIEWED BY AHJ.
7. THIS DEVICE CAN BE INSTALLED AS PART OF "E" & "D" IMPACT RESISTANT UNIT.
8. TWO-POINT SURFACE VERTICAL ROD MODELS - 8VL-SBD-TT - SEE TABLE 5.1 ON THIS SHEET.

GORDON D. THOMAS
LICENSE
No. 46718
STATE OF FLORIDA
PROFESSIONAL ENGINEER

2/22/26

Gordon Thomas, P.E.
3759 Blossom Court
Mason, OH 45040
Florida # 46718

Date

PRODUCT APPROVED
As complying with the Florida Building Code
NOA-No. 25-0527.03
Approval Date: 03/26/2026
By: Manuel Perez
Miami-Dade Product Control

SECURITECH
ASSA ABLOY
225 Episcopal Rd.
Berlin, CT 06037
(718)392–9000
Securitech, subsidiary of ASSA ABLOY

MIAMI–DADE COUNTY COMPONENT NOA ELEVATIONS
SECURITECH MULTI–POINT SURFACE
TWO–POINT VERTICAL LOCKSETS 8VL–SBD–TT SERIES

DATE CREATED	DRAWN BY	DESIGNED BY
11–15–24	HL	HL

DOCUMENT ID	SCALE	SIZE
113517–XX–XXX	N/A	B

DRAWING NUMBER (ALT ID)	REV
113517–01 SHEET 5 OF 9	04

REV.	DATE	DESCRIPTION	BY
1	8/10/25	EXIT DEVICE NOA PER MIAMI–DADE RER	YF
2	12/4/25	DBL OUTSWING DR NOA PER MD RER	YF
3	1/16/26	REVISED PER MD RER COMMENTS	YF
4	2/17/26	REVISED DRAWING NUMBER PER M–D RER	YF

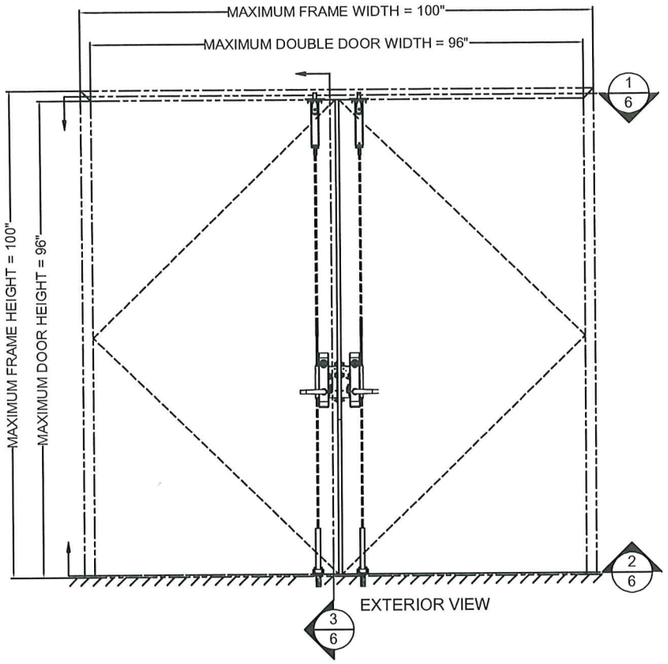

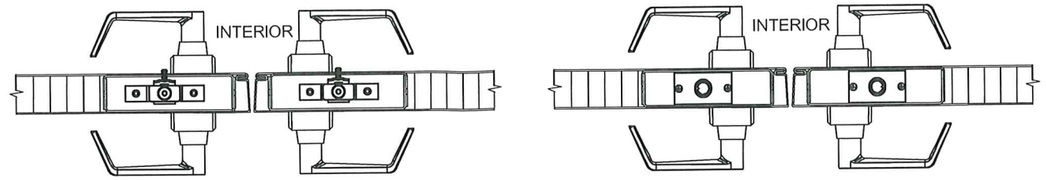

HORIZONTAL CROSS SECTIONS DOUBLE DOOR HDWE
AUTOBOLT 8VL-IHD-TI SERIES LOCKSET
1/6 MEETING EDGES OF DOORS 2/6

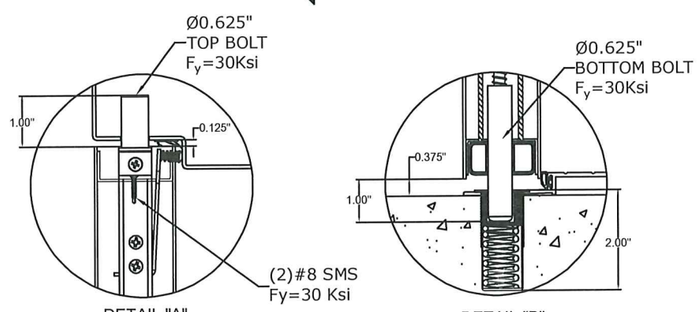

TOP BOLT REINFORCEMENT CHANNEL TRIGGER ASSEMBLY

BOTTOM BOLT REINFORCEMENT CHANNEL ASSEMBLY

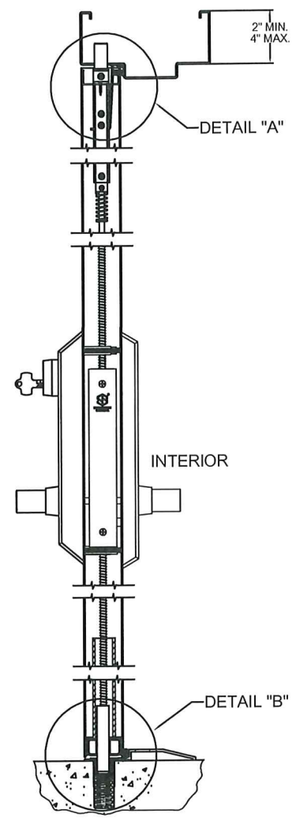

VERTICAL CROSS SECTION
3/6 DOUBLE DOOR HDWE
AUTOBOLT 8VL-IHD-TI SERIES LOCKSET

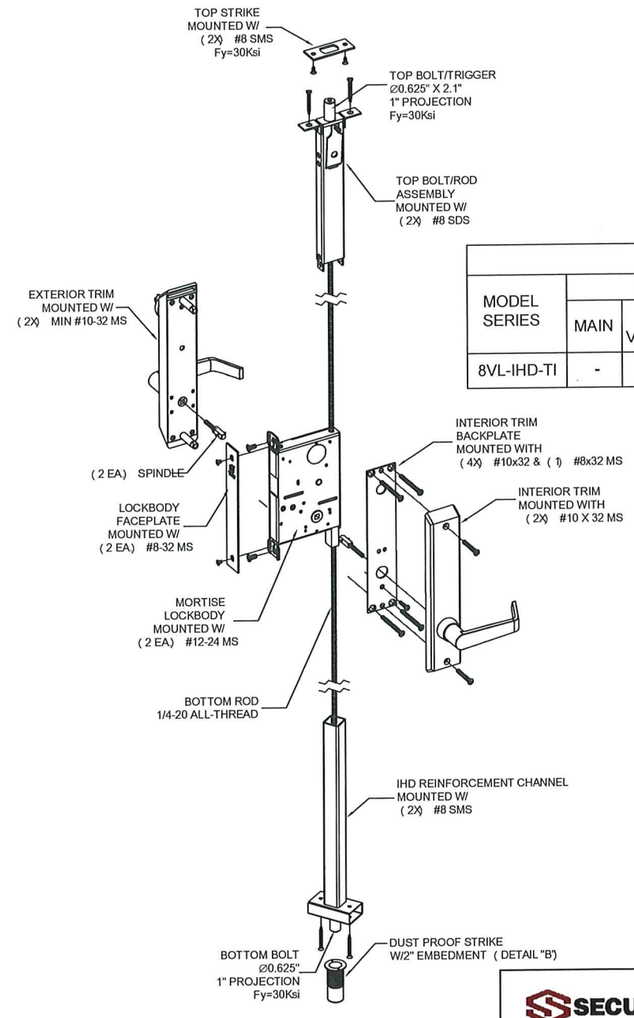

TABLE 6.1

MODEL NUMBER DESCRIPTIONS						
MODEL SERIES	DEADBOLTS CONFIGURATION					APPLICABLE TRIMS (SHT 10 OF 10)
	MAIN	TOP VERTICAL	BOTTOM VERTICAL	BOTTOM HORIZONTAL	HINGE SIDE STATIONARY BOLT	
8VL-IHD-TI	-	X	X	-	OPTIONAL	G, GG, UG, PB, DX

TABLE 6.2

COMPONENT APPROVAL DESIGN PRESSURE RATING	
POSITIVE	+150 PSF.
NEGATIVE	-150 PSF.

NOTES:

1. ALL FINISHES AND FUNCTIONS ARE OFFERED.
2. SEE SHEET 9 OF 9 FOR AVAILABLE LEVER TRIM OPTIONS.
3. ELECTRICAL AND ELECTRONIC FUNCTIONS INSTALLATIONS ARE UNDER SEPARATE APPROVAL AND MUST BE REVIEWED BY CORRESPONDING AUTHORITY.
4. THIS DEVICE IS APPROVED TO BE EQUAL ALTERNATIVE TO BE USED IN 16 GA STEEL COMMERCIAL DOORS HOLDING CURRENT IMPACT "E" RATED NOA, THE LOWEST DESIGN PRESSURE AND IMPACT PROTECTION LEVEL RATINGS SHALL APPLY. SEE SHEET 1 OF 9 FOR RATINGS AND LIMITATIONS.
5. THE DEVICE SHALL BE INSTALLED IN COMMERCIAL IMPACT "E" RATED STEEL DOOR NO WIDER THAN 48" AND HIGHER THAN 108". FOR IMPACT "D" SEE SHEET 1 OF 9.
6. OPTIONAL SIGNAL SWITCHES AND POWER TRANSFER UNITS MAY BE USED AS ALLOWED BY CODE AND IF IT DOESN'T AFFECT MECHANICAL PROPERTIES OF THIS DEVICE AND/OR INHIBIT EGRESS, TO BE REVIEWED BY AHJ.
7. THIS DEVICE CAN BE INSTALLED AS PART OF "E" & "D" IMPACT RESISTANT UNIT.
8. TWO-POINT SURFACE VERTICAL ROD MODELS - 8VL-IHD-TI - SEE TABLE 6.1 ON THIS SHEET.

GORDON D. THOMAS
LICENSE
No. 46718
STATE OF FLORIDA
PROFESSIONAL ENGINEER

2/22/26

Gordon Thomas, P.E.
3759 Blossom Court
Mason, OH 45040
Florida # 46718

Date

PRODUCT APPROVED
As complying with the Florida Building Code
NOA-No. 25-0527.03
Approval Date: 03/26/2026
By: Manuel Perez
Miami-Dade Product Control

SECURITECH
ASSA ABLOY
225 Episcopal Rd.
Berlin, CT 06037
(718)392–9000
Securitech, subsidiary of ASSA ABLOY

MIAMI–DADE COUNTY COMPONENT NOA
SECURITECH MULTI–POINT CONCEALED
TWO–POINT VERTICAL LOCKSETS
8VL–IHD–TI SERIES

DATE CREATED	DRAWN BY	DESIGNED BY
11–15–24	HL	HL

DOCUMENT ID	SCALE	SIZE
113517–XX–XXX	N/A	B

DRAWING NUMBER (ALT ID)	REV
113517–01 SHEET 6 OF 9	04

REV.	DATE	DESCRIPTION	BY
1	8/10/25	EXIT DEVICE NOA PER MIAMI–DADE RER	YF
2	12/4/25	DBL OUTSWING DR NOA PER MD RER	YF
3	1/16/26	REVISED PER MD RER COMMENTS	YF
4	2/17/26	REVISED DRAWING NUMBER PER M–D RER	YF

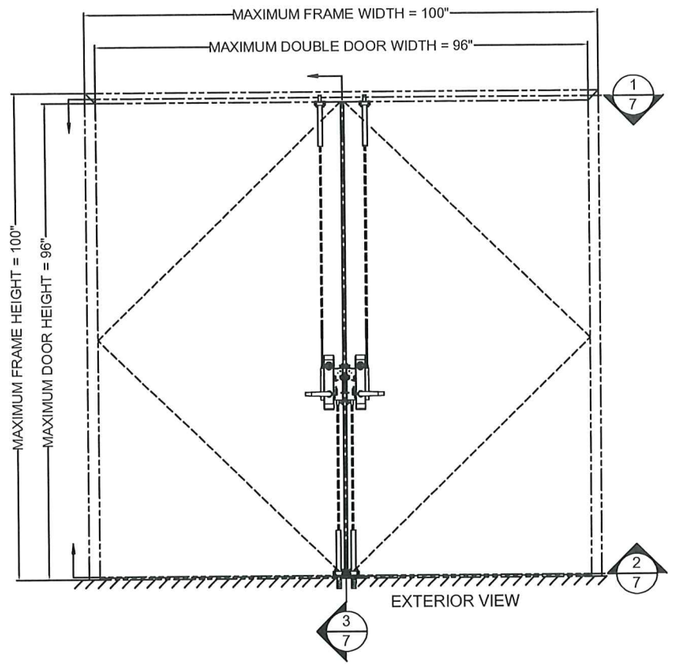

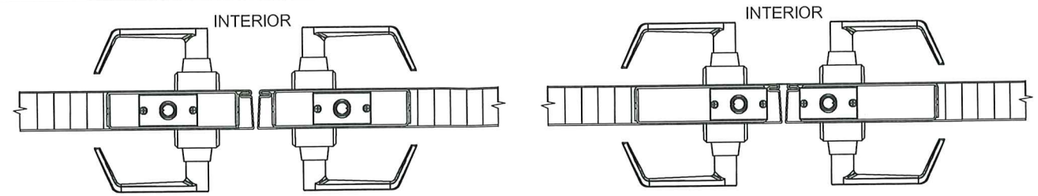

HORIZONTAL CROSS SECTIONS DOUBLE DOOR HDWE
52XXV & 7VL-IHD SERIES LOCKSET
1/7 MEETING EDGES OF DOORS 2/7

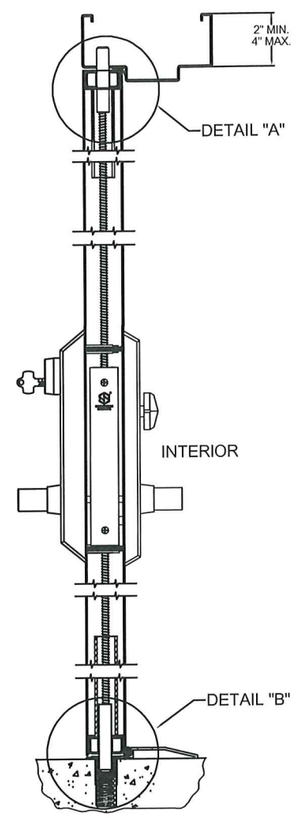

VERTICAL CROSS SECTION
3/7 DOUBLE DOOR HDWE
52XXV & 7VL-IHD SERIES LOCKSET

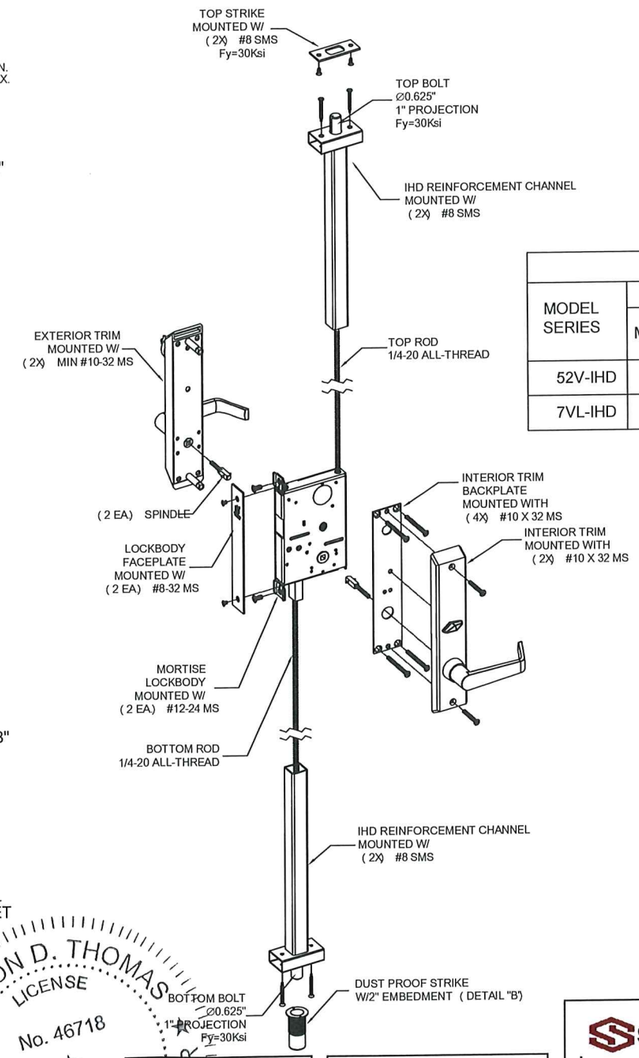

TABLE 7.1

MODEL NUMBER DESCRIPTIONS						
MODEL SERIES	DEADBOLTS CONFIGURATION					APPLICABLE TRIMS (SHT 9 OF 9)
	MAIN	TOP VERTICAL	BOTTOM VERTICAL	BOTTOM HORIZONTAL	HINGE SIDE STATIONARY BOLT	
52V-IHD	-	X	X	-	OPTIONAL	E, S
7VL-IHD	-	X	X	-	OPTIONAL	G, GG

TABLE 7.2

COMPONENT APPROVAL DESIGN PRESSURE RATING	
POSITIVE	+150 PSF.
NEGATIVE	-150 PSF.

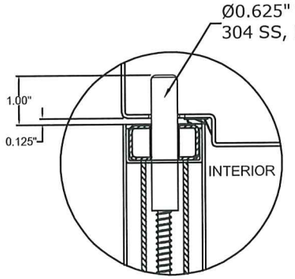

DETAIL "A"
TOP BOLT REINFORCEMENT CHANNEL ASSEMBLY

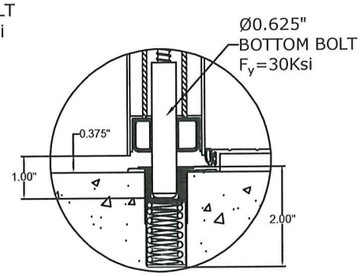

DETAIL "B"
BOTTOM BOLT REINFORCEMENT CHANNEL ASSEMBLY

NOTES:

1. ALL FINISHES AND FUNCTIONS ARE OFFERED.
2. SEE SHEET 9 OF 9 FOR AVAILABLE LEVER TRIM OPTIONS.
3. ELECTRICAL AND ELECTRONIC FUNCTIONS INSTALLATIONS ARE UNDER SEPARATE APPROVAL AND MUST BE REVIEWED BY CORRESPONDING AUTHORITY.
4. THIS DEVICE IS APPROVED TO BE EQUAL ALTERNATIVE TO BE USED IN 16 GA STEEL COMMERCIAL DOORS HOLDING CURRENT IMPACT "E" RATED NOA, THE LOWEST DESIGN PRESSURE AND IMPACT PROTECTION LEVEL RATINGS SHALL APPLY. SEE SHEET 1 OF 9 FOR RATINGS AND LIMITATIONS.
5. THE DEVICE SHALL BE INSTALLED IN COMMERCIAL IMPACT "E" RATED STEEL DOOR NO WIDER THAN 48" AND HIGHER THAN 108". FOR IMPACT "D" SEE SHEET 1 OF 9.
6. OPTIONAL SIGNAL SWITCHES AND POWER TRANSFER UNITS MAY BE USED AS ALLOWED BY CODE AND IF IT DOESN'T AFFECT MECHANICAL PROPERTIES OF THIS DEVICE AND/OR INHIBIT EGRESS, TO BE REVIEWED BY AHJ.
7. THIS DEVICE CAN BE INSTALLED AS PART OF "E" & "D" IMPACT RESISTANT UNIT.
8. TWO-POINT CONCEALED VERTICAL ROD MODELS - 52V-IHD & 7VL-IHD - SEE TABLE 7.1 ON THIS SHEET.

GORDON D. THOMAS LICENSE No. 46718 STATE OF FLORIDA PROFESSIONAL ENGINEER

Gordon Thomas, P.E.
3790 Blossom Court
Mason, OH 45040
Florida # 46718

2/22/2026
Date

PRODUCT APPROVED
As complying with the Florida Building Code
NOA-No. 25-0527.03
Approval Date: 03/26/2026
By: Manuel Perez
Miami-Dade Product Control

SECURITECH
ASSA ABLOY
225 Episcopal Rd.
Berlin, CT 06037
(718)392–9000
Securitech, subsidiary of ASSA ABLOY

MIAMI–DADE COUNTY COMPONENT NOA
SECURITECH MULTI–POINT CONCEALED
TWO–POINT VERTICAL LOCKSETS
52XXV–IHD & 7VL–IHD SERIES

DATE CREATED	DRAWN BY	DESIGNED BY
11–15–24	HL	HL

DOCUMENT ID	SCALE	SIZE
113517–XX–XXX	N/A	B

DRAWING NUMBER (ALT ID)	REV
113517–01 SHEET 7 OF 9	04

REV.	DATE	DESCRIPTION	BY
1	8/10/25	EXIT DEVICE NOA PER MIAMI–DADE RER	YF
2	12/4/25	DBL OUTSWING DR NOA PER MD RER	YF
3	1/16/26	REVISED PER MD RER COMMENTS	YF
4	2/17/26	REVISED DRAWING NUMBER PER M–D RER	YF

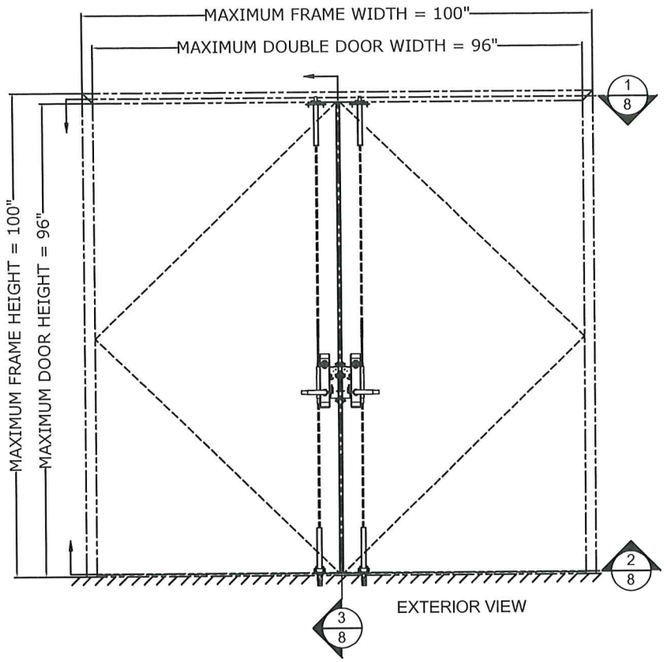

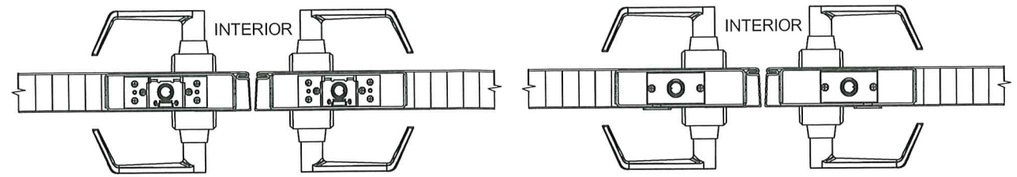

HORIZONTAL CROSS SECTIONS DOUBLE DOOR HDWE
AUTOBOLT-MAX AWVCJ SERIES LOCKSET
1/8 MEETING EDGES OF DOORS 2/8

TABLE 8.1

MODEL NUMBER DESCRIPTIONS						
MODEL SERIES	DEADBOLTS CONFIGURATION					APPLICABLE TRIMS (SHT 9 OF 9)
	MAIN	TOP VERTICAL	BOTTOM VERTICAL	BOTTOM HORIZONTAL	HINGE SIDE STATIONARY BOLT	
AWVCJ	-	X	X	-	-	E, G, S, UG, PB, CX
AWVCJ-B1/B2	-	X	X	-	X	E, G, S, UG, PB, CX

TABLE 8.2

COMPONENT APPROVAL DESIGN PRESSURE RATING	
POSITIVE	+150 PSF.
NEGATIVE	-150 PSF.

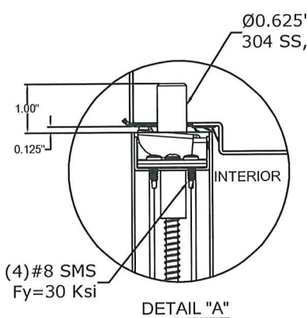

DETAIL "A"
TOP BOLT REINFORCEMENT CHANNEL TRIGGER ASSEMBLY

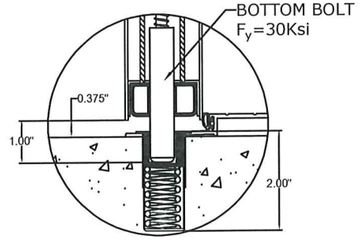

DETAIL "B"
BOTTOM BOLT REINFORCEMENT CHANNEL ASSEMBLY

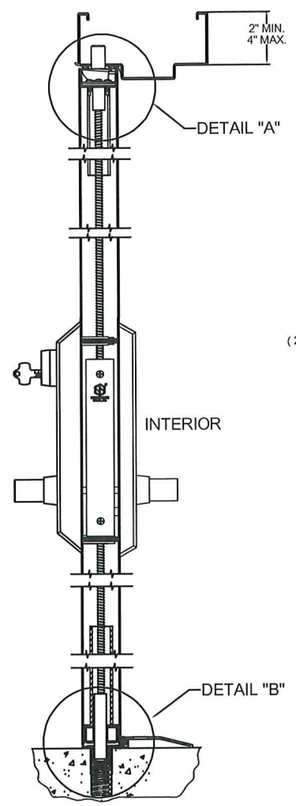

VERTICAL CROSS SECTION
3/8 DOUBLE DOOR HDWE
AUTOBOLT-MAX AWVCJ SERIES LOCKSET

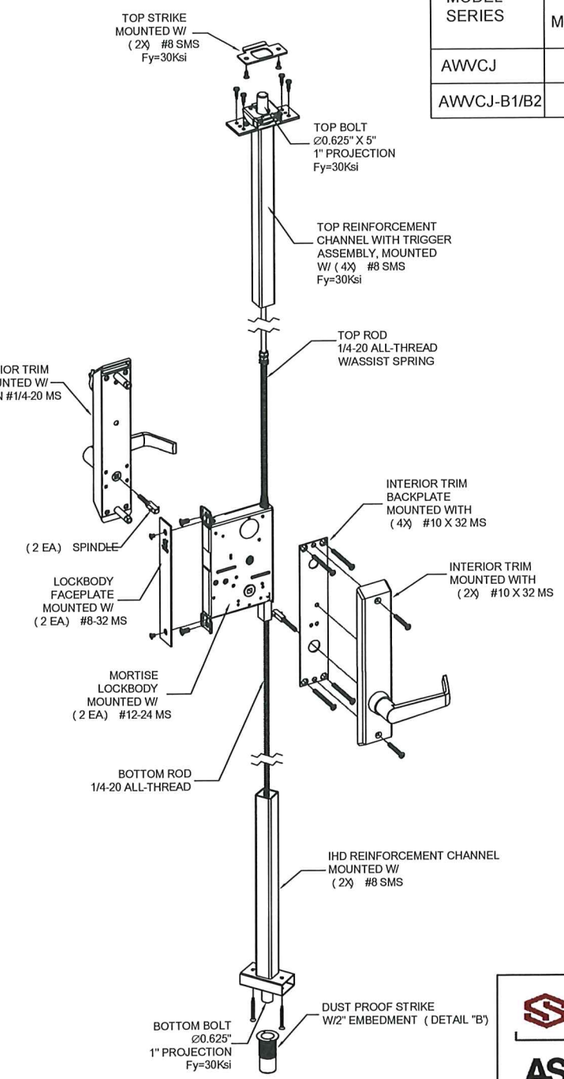

NOTES:

1. ALL FINISHES AND FUNCTIONS ARE OFFERED.
2. SEE SHEET 9 OF 9 FOR AVAILABLE LEVER TRIM OPTIONS.
3. ELECTRICAL AND ELECTRONIC FUNCTIONS INSTALLATIONS ARE UNDER SEPARATE APPROVAL AND MUST BE REVIEWED BY CORRESPONDING AUTHORITY.
4. THIS DEVICE IS APPROVED TO BE EQUAL ALTERNATIVE TO BE USED IN 16 GA STEEL COMMERCIAL DOORS HOLDING CURRENT IMPACT "E" RATED NOA, THE LOWEST DESIGN PRESSURE AND IMPACT PROTECTION LEVEL RATINGS SHALL APPLY. SEE SHEET 1 OF 9 FOR RATINGS AND LIMITATIONS.
5. THE DEVICE SHALL BE INSTALLED IN COMMERCIAL IMPACT "E" RATED STEEL DOOR NO WIDER THAN 48" AND HIGHER THAN 108". FOR IMPACT "D" SEE SHEET 1 OF 9.
6. OPTIONAL SIGNAL SWITCHES AND POWER TRANSFER UNITS MAY BE USED AS ALLOWED BY CODE AND IF IT DOESN'T AFFECT MECHANICAL PROPERTIES OF THIS DEVICE AND/OR INHIBIT EGRESS, TO BE REVIEWED BY AHJ.
7. THIS DEVICE CAN BE INSTALLED AS PART OF "E" & "D" IMPACT RESISTANT UNIT.
8. TWO-POINT CONCEALED VERTICAL ROD MODELS - AWVCJ - SEE TABLE 8.1 ON THIS SHEET.

GORDON D. THOMAS
LICENSE
No. 46718
STATE OF FLORIDA
PROFESSIONAL ENGINEER

2/22/26

Gordon Thomas, P.E.
3759 Blossom Court
Mason, OH 45040
Florida # 46718

Date

PRODUCT APPROVED
As complying with the Florida Building Code
NOA-No. 25-0527.03
Approval Date: 03/26/2026
By: Manuel Perez
Miami-Dade Product Control

SECURITECH
ASSA ABLOY
225 Episcopal Rd.
Berlin, CT 06037
(718)392–9000
Securitech, subsidiary of ASSA ABLOY

MIAMI–DADE COUNTY COMPONENT NOA
SECURITECH MULTI–POINT CONCEALED
TWO–POINT VERTICAL LOCKSETS
AWVCJ SERIES

DATE CREATED	DRAWN BY	DESIGNED BY	
11–15–24	HL	HL	
DOCUMENT ID 113517–XX–XXX		SCALE N/A	SIZE B
DRAWING NUMBER (ALT ID) 113517–01 SHEET 8 OF 9			REV 04

REV.	DATE	DESCRIPTION	BY
1	8/10/25	EXIT DEVICE NOA PER MIAMI–DADE RER	YF
2	12/4/25	DBL OUTSWING DR NOA PER MD RER	YF
3	1/16/26	REVISED PER MD RER COMMENTS	YF
4	2/17/26	REVISED DRAWING NUMBER PER M–D RER	YF

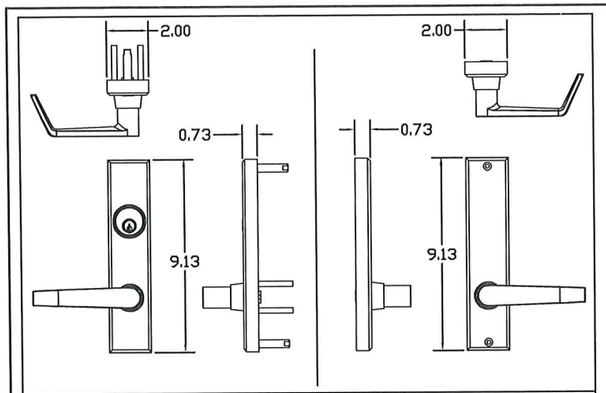

EXTERIOR | **S**-STYLE TRIM | INTERIOR

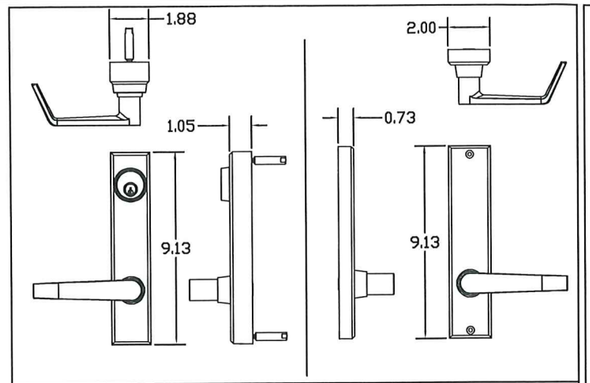

EXTERIOR | **GG**-STYLE TRIM | INTERIOR

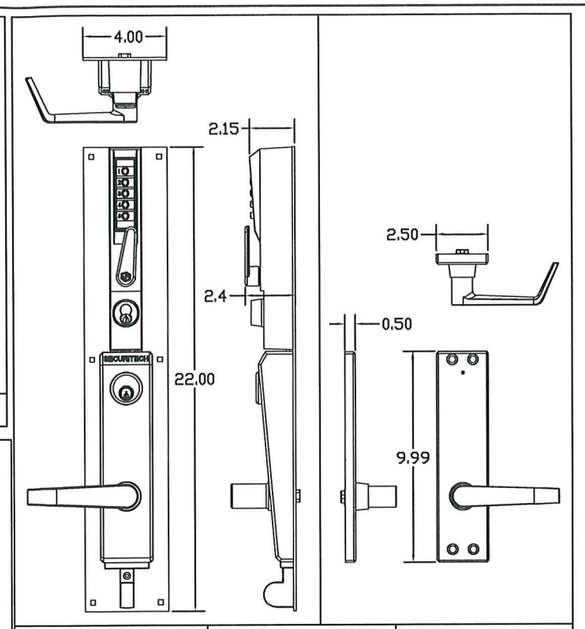

EXTERIOR | **PB**-STYLE TRIM | INTERIOR

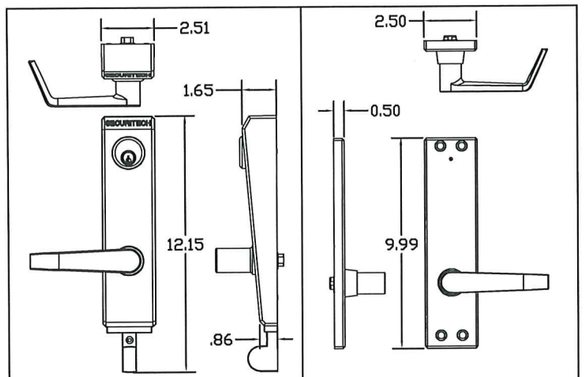

EXTERIOR | **UG**-STYLE TRIM | INTERIOR

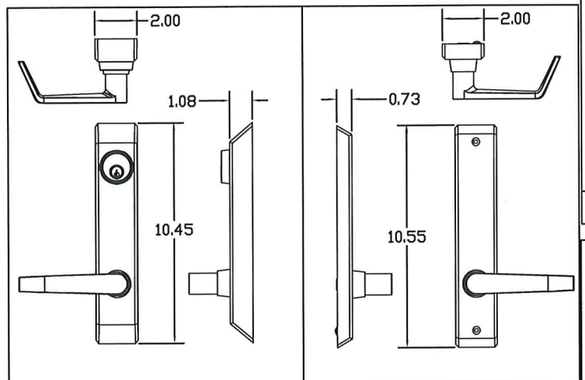

EXTERIOR | **G**-STYLE TRIM | INTERIOR

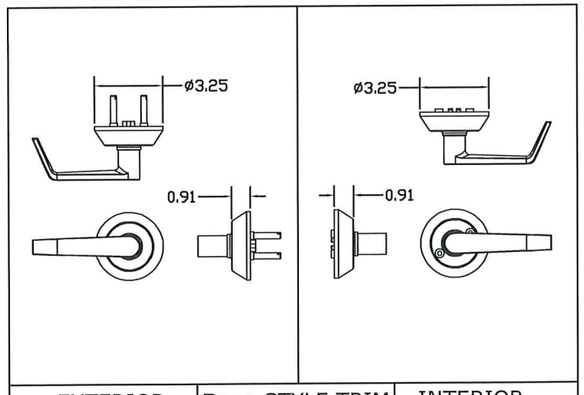

EXTERIOR | **R**ose-STYLE TRIM | INTERIOR

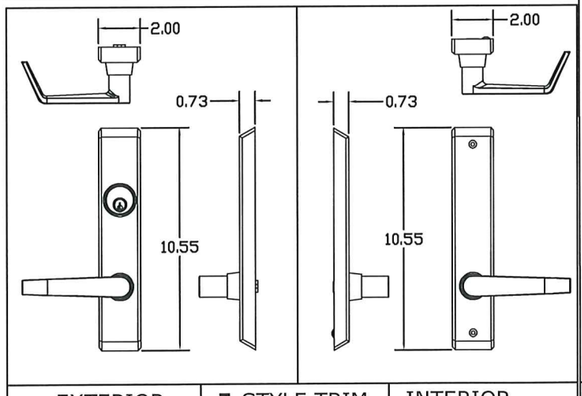

EXTERIOR | **E**-STYLE TRIM | INTERIOR

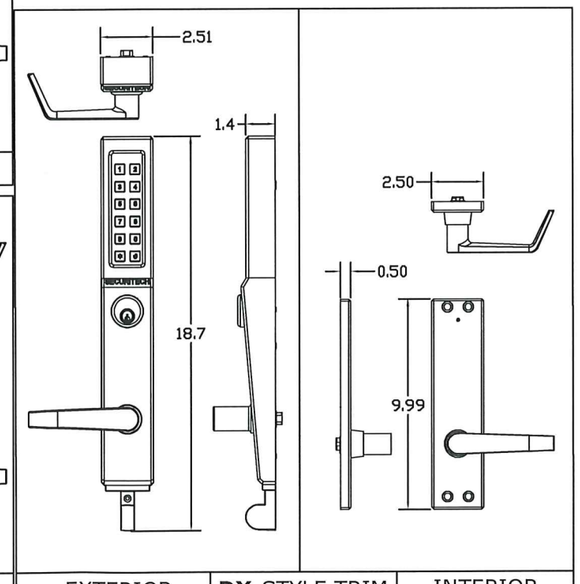

EXTERIOR | **DX**-STYLE TRIM | INTERIOR

TABLE 9.1

TRIM APPLICABILITY		
SERIES	REFERENCE	TRIM OPTIONS
52V-IHD	SHEET 7 OF 9	E & S
7VL-IHD	SHEET 7 OF 9	G & GG
8VL-IHD-TI	SHEET 6 OF 9	G, GG, UG, PB, DX
8VL-SBD-TT	SHEET 5 OF 9	G, GG, UG, PB, DX
7VT-IHD	SHEET 4 OF 9	G, GG, E, S
8VT-IHD-TI	SHEET 3 OF 9	G, GG, UG, PB, DX
8VT-SBD-TT	SHEET 2 OF 9	G, GG, UG, PB, DX
AWVCJ-EXX	SHEET 8 OF 9	E, G, R, UG, PB, CX
AWVCJ-TXX	SHEET 3 OF 9	E, G, R, UG, PB, CX

NOTES:

1. ALL FINISHES AND FUNCTIONS ARE OFFERED
2. SEE TABLE 9.1 FOR APPLICABLE SERIES AND DRAWING REFERENCE
3. ELECTRIFIED AND ELECTRONIC FUNCTIONS ARE NOT PART OF THIS APPROVAL AND MUST BE REVIEWED BY CORRESPONDING AUTHORITY

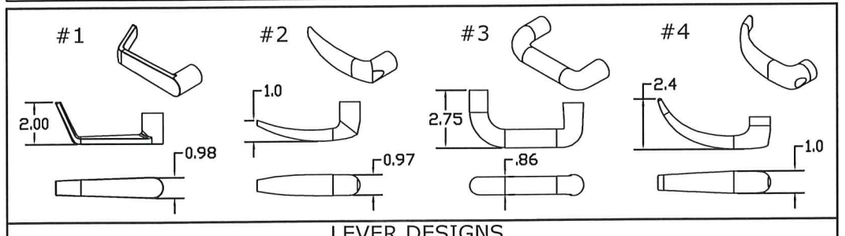

LEVER DESIGNS

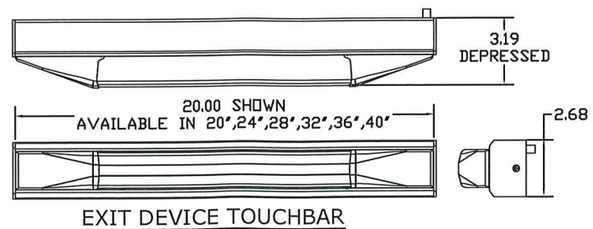

EXIT DEVICE TOUCHBAR

STATE OF FLORIDA
GORDON THOMAS
LICENSE
No. 46718
PROFESSIONAL ENGINEER

Gordon Thomas, P.E.
3759 Blossom Court
Mason, OH 45040
Florida # 46718

2/22/26
Date

PRODUCT APPROVED
As complying with the Florida Building Code
NOA-No. 25-0527.03
Approval Date: 03/26/2026
By: Manuel Perez
Miami-Dade Product Control

SECURITECH
ASSA ABLOY
225 Episcopal Rd.
Berlin, CT 06037
(718)392-9000
Securitech, subsidiary of ASSA ABLOY

MIAMI–DADE COUNTY COMPONENT NOA
SECURITECH 2–POINT CONCEALED AND SURFACE MOUNTED LOCKS AND EXIT DEVICES
5000/7000/8000/AWM SERIES
TRIM AND PANIC BAR OPTIONS

DATE CREATED	DRAWN BY	DESIGNED BY	
11–15–24	HL	HL	
DOCUMENT ID 113517–XX–XXX		SCALE N/A	SIZE B
DRAWING NUMBER (ALT ID) 113517–01 SHEET 9 OF 9			REV 04